NEW-888

Table of Contents

Design Goals:....1
Block Diagram:....2
Block Details:....3
Low Pass Filter....3
Variable Gain Amplifier....4
Analog to Digital Converter....4
Clocks....5
Reference Clock Input....5
Si5351 Clock Generator....5
FX3 USB Interface....5
Power Supply....6
Layout....7
Top....7
Bottom....9
Ground Planes....11
Power Plane....12
Cost....13

Design Goals:

A simplified SDR, based on the RX-888:

- Proof-of-concept design
- HF-only, no VHF converter
- Larger PCB, 6-layer
- No bottom-side components
- 0603 passive components
- Improved thermal layout
- Improved RF input filter (bypassable)
- External reference clock input, auto-switching
- Attenuated filter-bypass injector port (used for timesync)

Block Diagram:

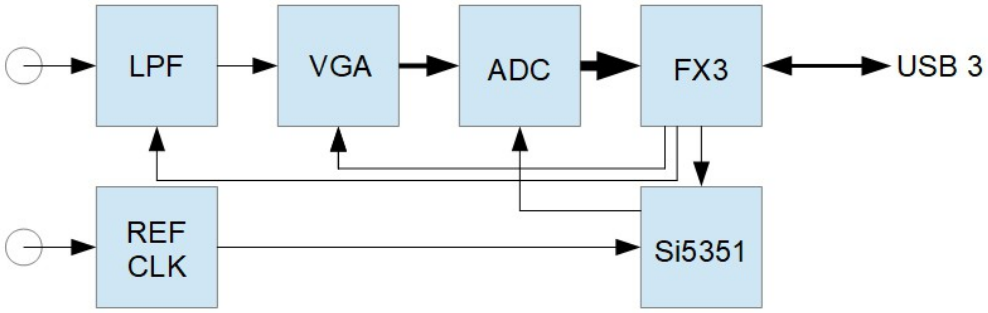

Block Details:

Low Pass Filter

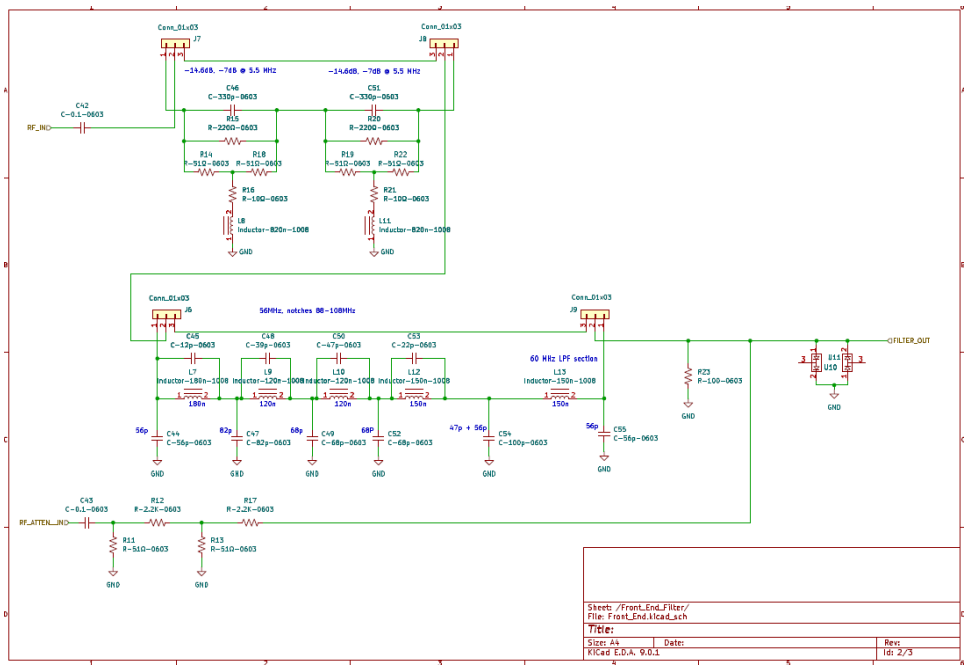

The existing RX-888 has a demonstrably poor input filter so this design includes an improved multi-section elliptical input filter combined with a high-pass shelf filter. There is a single 50 Ohm SMA input jack. While a balanced input is probably a desirable option, in the sake of simplicity I have decided to use an unbalanced design. With the shelf filter bypassed, this filter provides low-frequency response roll off at about 30 KHz.

The overall low freq cutoff is also affected by coupling caps at the VGA input and output. These can be changed in value if desired.

Some RX-888 users have requested that there be no input filtering at all, allowing them to operate in aliasing mode using external filters. To facilitate this, both the shelf and the low-pass filters can be bypassed using header-pin jumpers.

There is an SMA input jack that feeds the output of the filters with an attenuated signal. This can be used as a time-sync input.

Variable Gain Amplifier

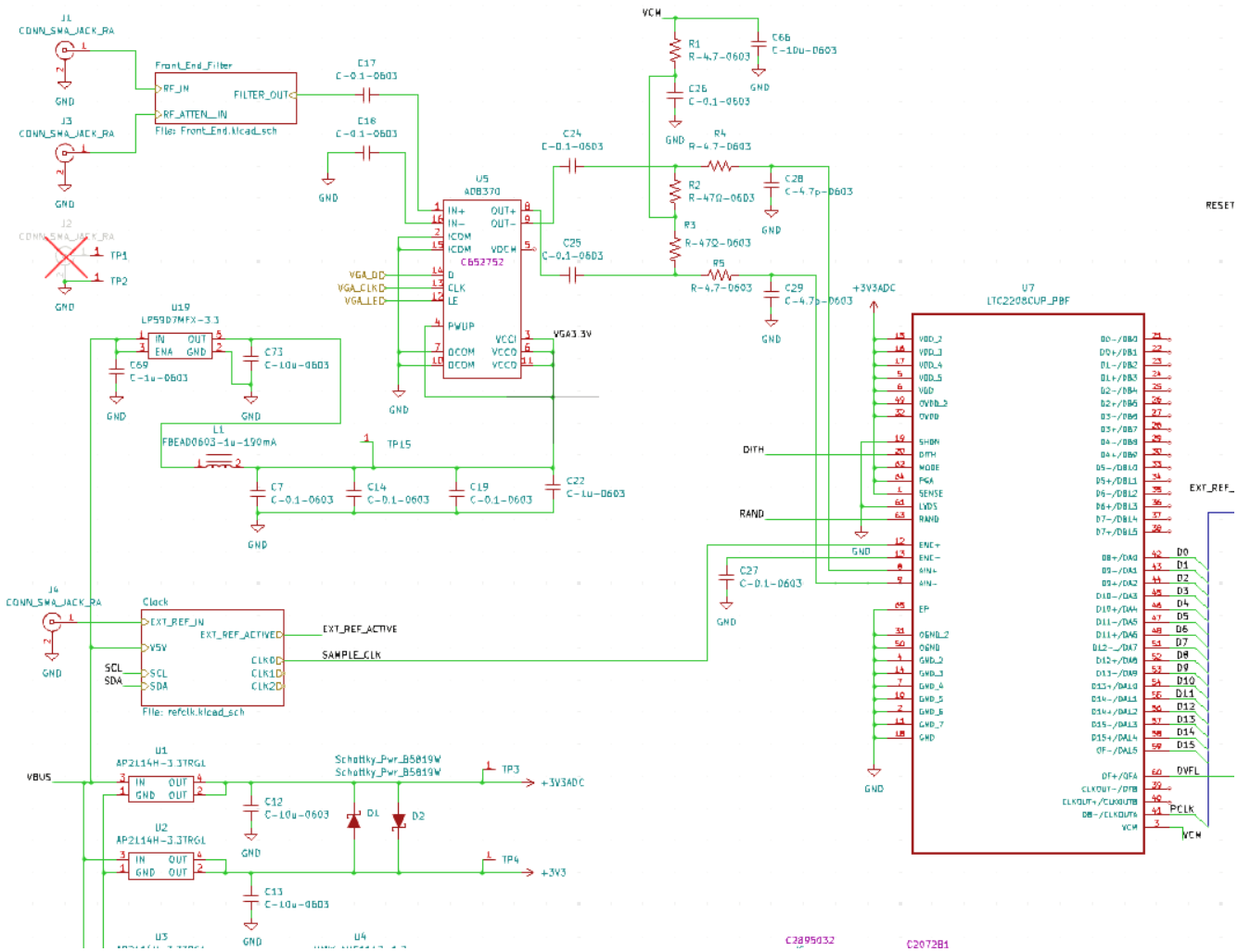

The existing RX-888 has a coupling transformer that provides a balanced input to the VGA, and provides a 1:2 impedance step-up to match the filter to the 200 Ohm amplifier input impedance. The existing RX-888 also includes a variable attenuator and RF source multiplexers. In order to provide extended low frequency response, the new design eliminates these multiplexers and the transformer, instead driving the amplifier from a single-ended 50 Ohm source. This will reduce the overall gain, but elimination of the multiplexers will partially mitigate this.

Analog to Digital Converter

The board is designed to use the LTC2298 16-bit ADC (as is used in the RX-888), but the pin-compatible 12-bit variant can be used instead.

The analog input is provided by the differential output of the VGA, with minimal filtering.

The sample clock is provided by the Si5351 clock generator followed by a differential output buffer A future option to explore is to invert one of the unused outputs of the Si5351 to create a differential clock. Very accurate phase-control is available in this mode.

Clocks

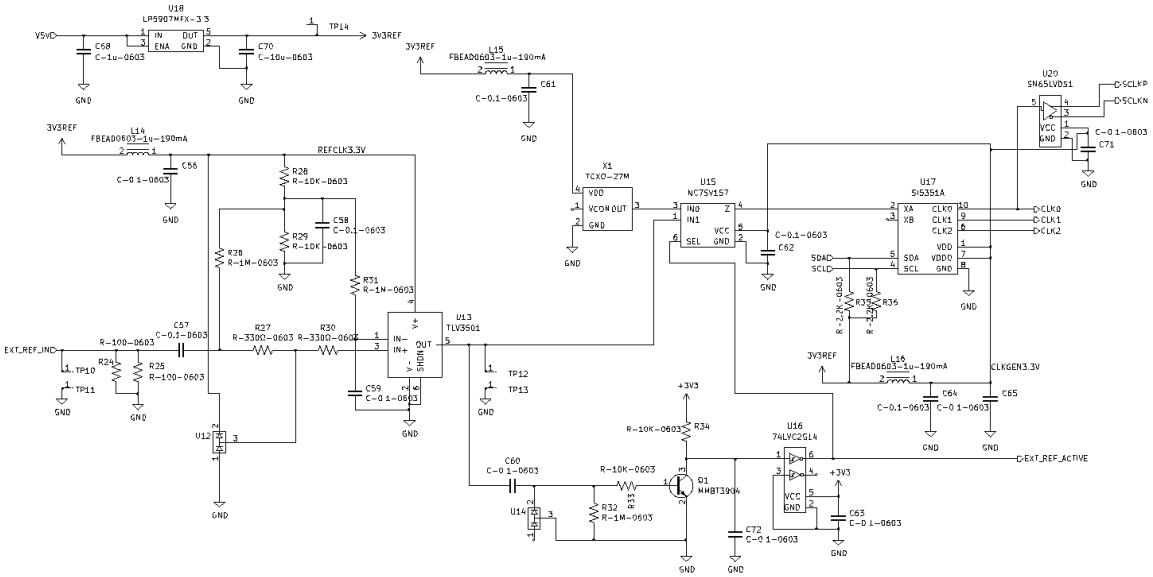

Reference Clock Input

While the RX-888 typically uses a 27 MHz reference clock (and this is the fall-back frequency provided by the internal TCXO), in some cases a different frequency is used. The reference clock input allows virtually any frequency to be used.

This is a well-protected and properly-terminated clock input circuit, accepting a sine or square-wave input from 10 to 30 MHz (the reasonable limits of the internal Si5351 clock generator), with an amplitude range between -20 to +20 dBm. A clock-presence detector circuit automatically switches between the internal 27 MHz TCXO and the external clock. The clock detector status is available to be read by the FX3 firmware.

The clock-switching section may be modified to allow software control as well as automatic operation.

A clock-status LED will probably be added.

Si5351 Clock Generator

(see "**Analog to Digital Converter**" for details)

FX3 USB Interface

(working on this documentation)

Power Supply

The board is powered from the USB-3 port, drawing approximately 1A at 5V.

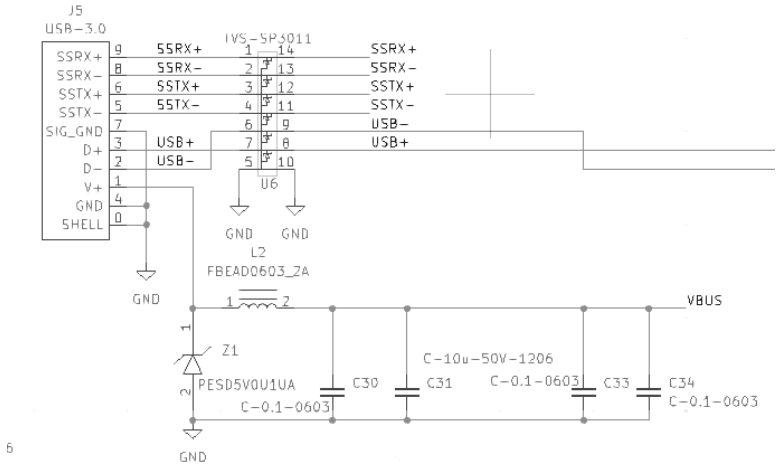

There are three principal regulated voltage domains: 1.25V for the FX3 core, 3.3V for the FX3 I/O, and 3.3V for the ADC. In addition, the VGA and the clock section each have 3.3V supplied by individual regulators.

The FX3 and ADC 3.3V sources are fed by individual regulators, but the regulator outputs are clamped together by two Schottky diodes to ensure that these outputs start up together. A single regulator can provide the initial current, but dual regulators are used to distribute the thermal dissipation.

The 1.25V regulator is connected to a 3.3V pre-regulator, again to distribute the thermal dissipation.

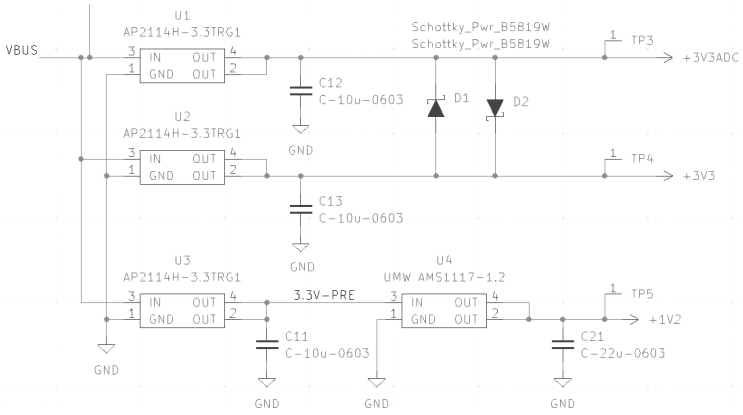

Layout

This is a six-layer board, with all components on the top. The board is 76mm wide, 100mm long.

The layers are:

Top	Signal and power traces
2	Ground
3	Power planes
4	Signal + ground + 1.2V Power
5	Ground
Bottom	Signal + ground

Top

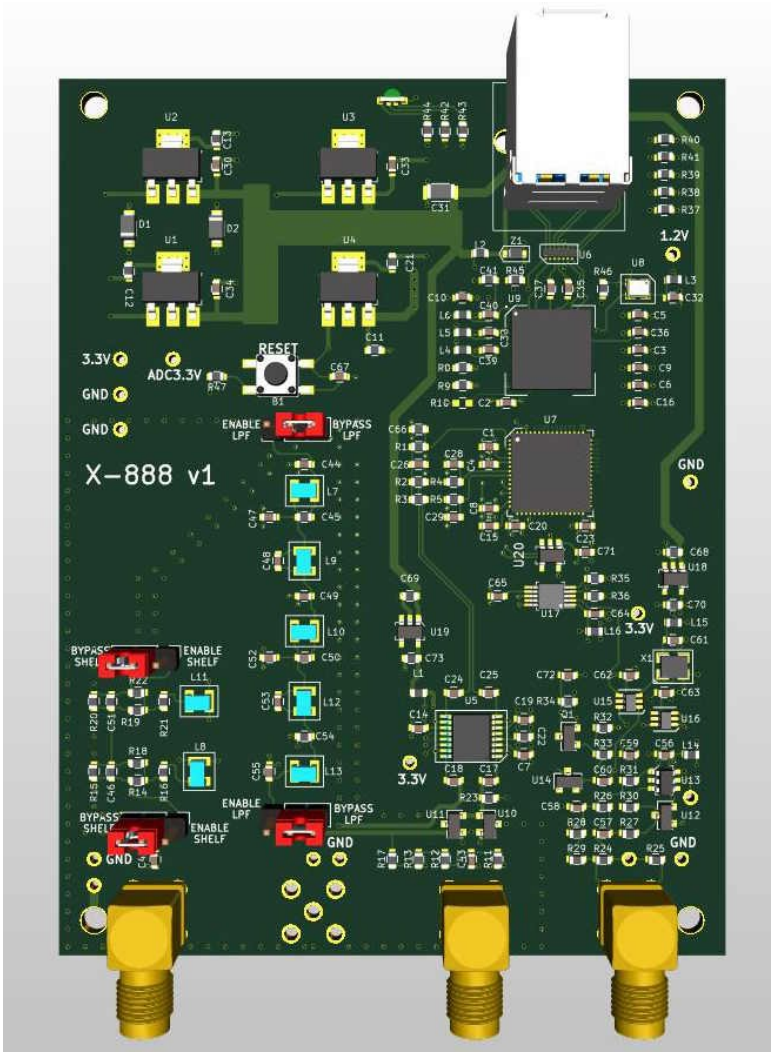

Bottom

The components with significant thermal dissipation have copper zones on all layers, interconnected by thermal vias. The bottom-side solder-mask is absent around these zones, allowing for the use of a thermal pad to transfer the heat to the aluminum enclosure. The four un-masked areas underneath the voltage regulators are electrically connected to the various positive regulator outputs, while the areas under the VGA and the ADC are at ground potential.

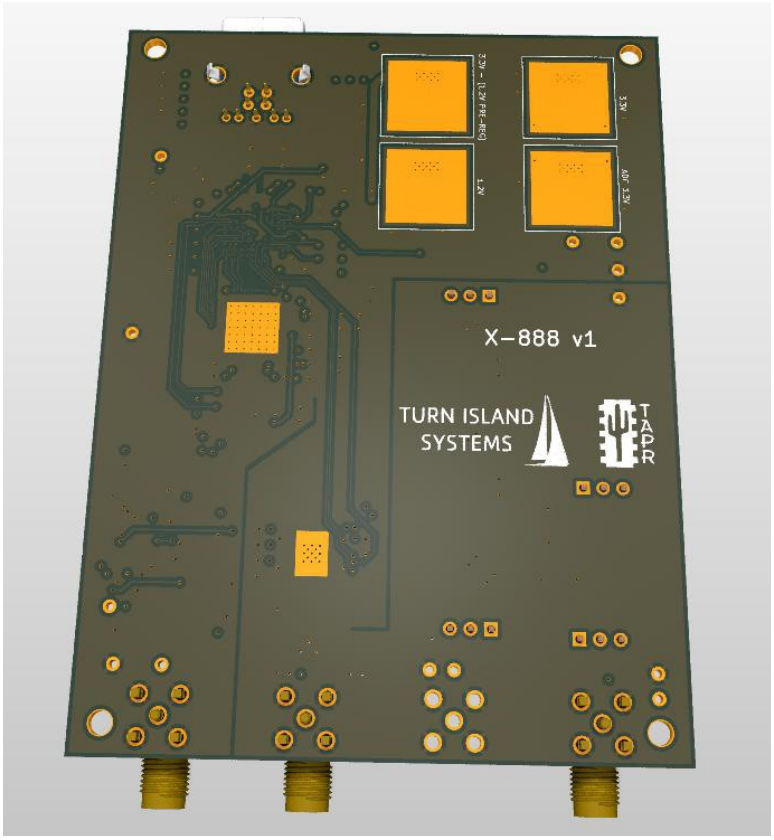
X-888 v1
TURN ISLAND
SYSTEMS
TAPR

Ground Planes

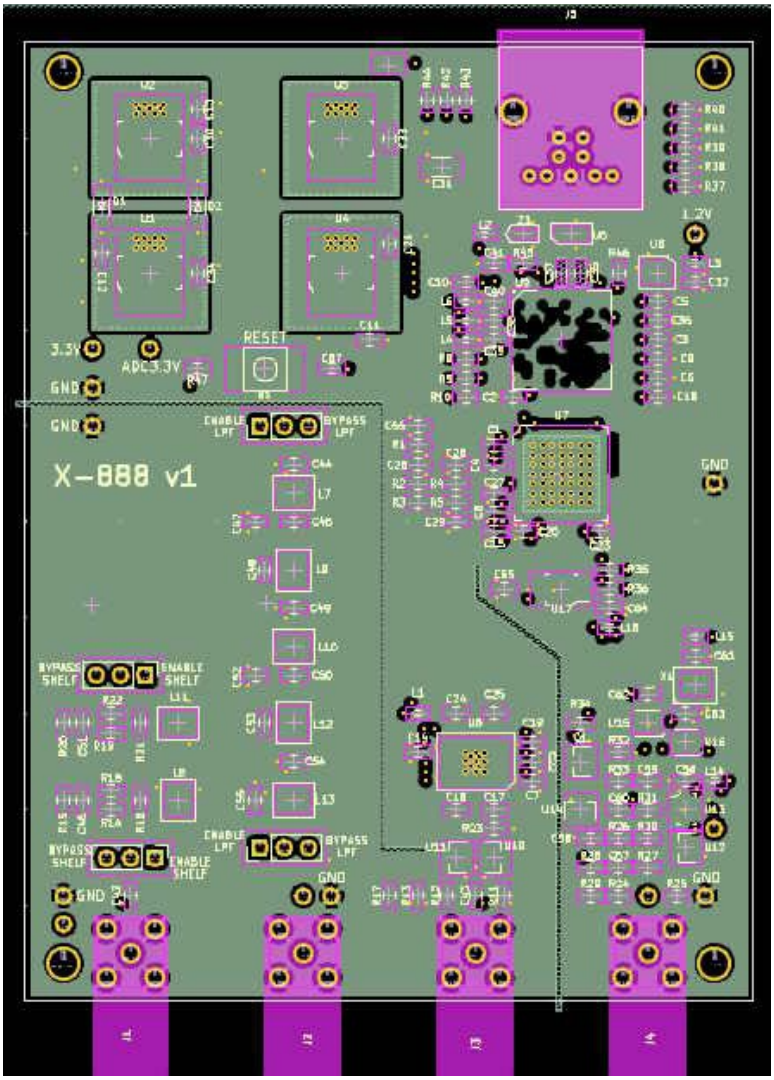

The ground and power planes have isolation gaps (seen here on the layer-2 groundplane) that are intended to reduce ground-path current induced inter-stage coupling.

Power Plane

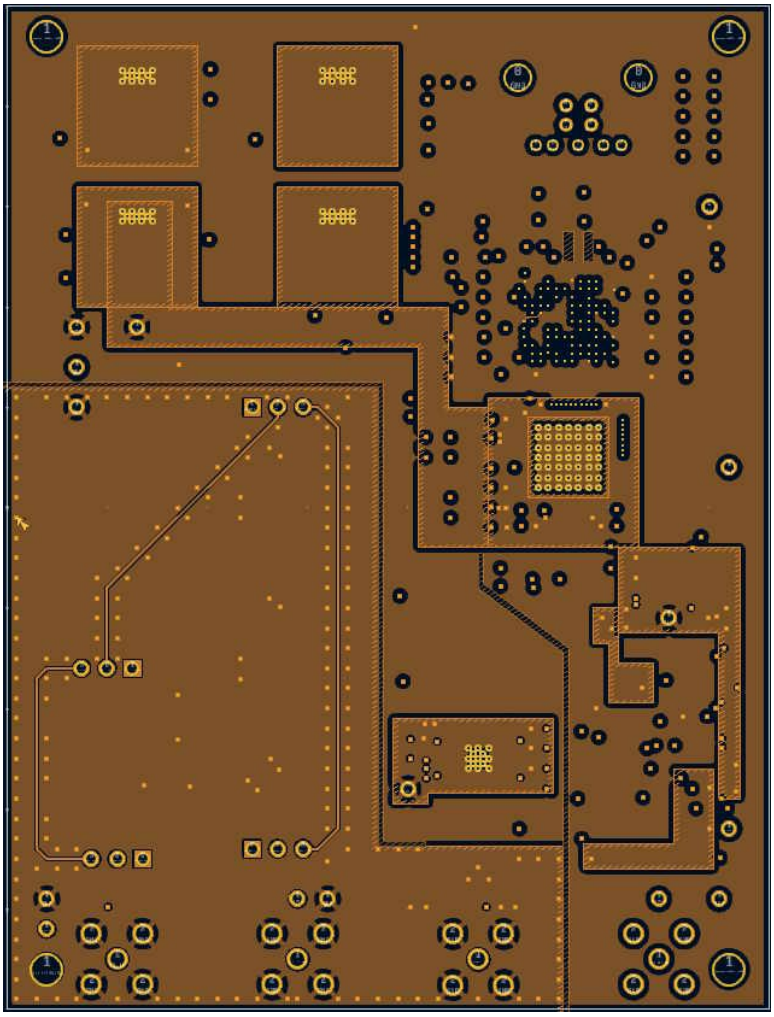

The layer 3 power plane distributes the various +3.3V supplies, with some isolated sections that provide additional filtering.

In the area of the RF input filters this layer is used as additional groundplane and signal routing.

The +1.2V supply is distributed on layer 4.

Cost

JLCPCB fab/assy, qty 5

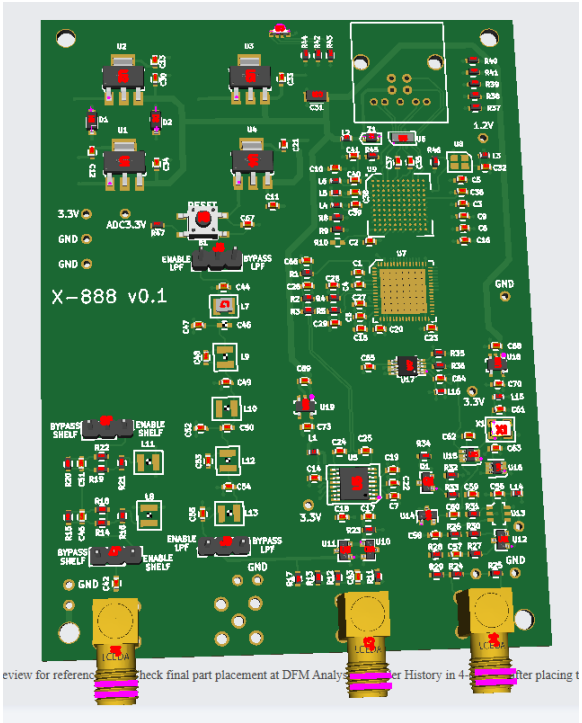

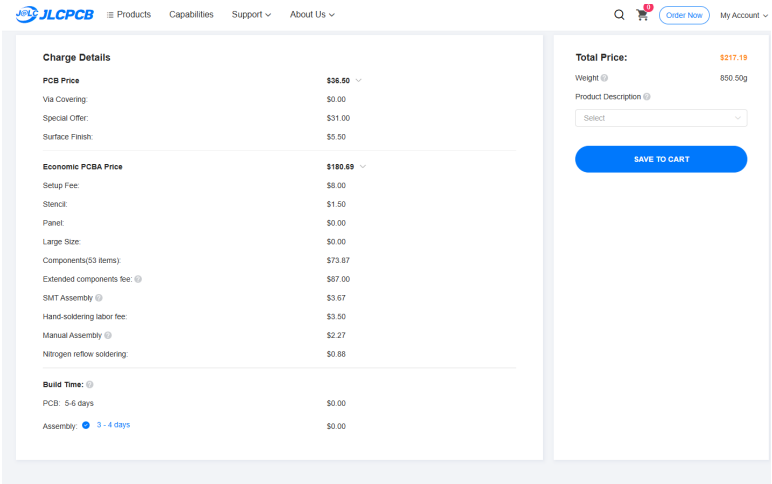

Missing parts, +$177:
LTC2208 ADC: $150 (qty 10, Mouser) – 14-bit parts cost about the same
CYUSB3014-BZXCT: $25 (qty 10, DigiKey)
TLV3501 (comparator): $1.20 (qty 10, LCSC)
USB-306BWD-ARW (USB 3.0 connector): $0.41 (qty 10, LCSC)
Oscillator-19.2MHz: $033 (qty 10, LCSC)

JLC fab+assy cost, plus missing parts = approx $400
add:
12% sales tax: $48
50% customs / tariff: $200
Shipping: $150

Total: $798
About $160 per board, probably more.

The enclosure I use costs about $7 (including custom PCB faceplates).
External heatsink: $?
Thermal pad: $?
Testing: $?